Published by :
https://www.ijert.org/
An International Peer-Reviewed Journal

International Journal of Engineering Research & Technology (IJERT)
ISSN: 2278-0181
Vol. 15 Issue 11 , November - 2026

Smart Emergency Communication System for Natural Disasters using LoRa

Nishchitha R [1], Praghna MK[2], Poorvi C Raj[3], Neha N[4], Divyashree G[5]

[1],[2],[3],[4] Department of Electronics and Communication Engineering, GSSS Institute of Engineering and Technology for Women, Mysuru, Karnataka, India

[5] Assistant Professor, Department of Electronics and Communication Engineering, GSSS Institute of Engineering and Technology for Women, Mysuru, Karnataka, India

Abstract - Natural disasters such as floods, earthquakes, cyclones, and landslides can disrupt conventional communication infrastructure, making it difficult for affected individuals to communicate during emergencies. This paper presents a Smart Emergency Communication System for Natural Disasters Using Long Range (LoRa) technology. The proposed system consists of transmitter and receiver units implemented using ESP32 development boards and SX1278 LoRa modules operating at 433 MHz. A smartphone is connected to the transmitter through Bluetooth to send text messages, which are transmitted wirelessly to the receiver using LoRa. A panic button is integrated into the transmitter to initiate an emergency alert containing Global Positioning System (GPS) coordinates when a valid location fix is available. At the receiver, the received messages and emergency alerts are displayed on a 16 × 2 liquid crystal display (LCD). Experimental testing demonstrated communication over a distance of up to 2 km in a built-up environment with obstacles. The GPS module provided valid coordinates in open spaces; however, in closed spaces, valid coordinates could not be obtained, resulting in zero coordinates being included in the panic alert. The developed prototype demonstrates the feasibility of LoRa-based emergency messaging without relying on cellular networks or internet connectivity for the direct transmitter-to-receiver link. The system can serve as a supplementary communication solution for disaster-affected and remote areas.

Keywords - Disaster communication, LoRa, ESP32, GPS, panic alert, emergency messaging, wireless communication.

I. INTRODUCTION

Natural disasters such as earthquakes, floods, cyclones, and landslides can cause extensive damage to infrastructure and disrupt essential communication services. During such emergencies, cellular networks and internet connectivity may become unavailable due to damaged network equipment, power failures, or network congestion. The inability to communicate during these situations can delay emergency response and make it difficult for affected individuals to convey their needs and locations. Therefore, an alternative communication system that can operate independently of conventional network infrastructure is valuable for disaster management.

Long Range (LoRa) technology is a low-power wireless communication technology designed to support communication over extended distances. It is suitable for applications that require small amounts of data to be transmitted with relatively low power consumption. Unlike communication systems that depend on cellular infrastructure, a direct LoRa link can transfer messages between compatible transmitter and receiver devices without requiring an internet connection or a cellular network. These characteristics make LoRa a potential technology for supplementary emergency communication in disaster-affected and remote areas.

This paper presents a Smart Emergency Communication System for Natural Disasters Using LoRa. The proposed prototype consists of transmitter and receiver units implemented using ESP32 development boards and SX1278 LoRa modules operating at 433 MHz. A smartphone is connected to the transmitter through Bluetooth using a serial terminal application, allowing users to enter and send text messages. The transmitter forwards these messages to the receiver through LoRa. In addition, a panic button is provided to initiate an emergency alert containing GPS coordinates when a valid location fix is available. The receiver processes incoming messages and displays normal messages and panic alerts on a 16 × 2 liquid crystal display (LCD).

The prototype was experimentally tested in a built-up environment containing obstacles, and communication was achieved over a distance of up to 2 km under the tested conditions. GPS testing showed that valid coordinates were obtained in open spaces, whereas valid location fixes were unavailable in closed spaces. In the latter case, the implemented system transmitted zero coordinates in the panic alert. These observations demonstrate the operation of the proposed communication prototype while identifying the limitations of

(This work is licensed under a Creative Commons Attribution 4.0 International License.)

International Journal of Engineering Research & Technology (IJERT)
ISSN: 2278-0181
Vol. 15 Issue 11 , November - 2026

GPS-based location reporting in environments with restricted satellite signal reception.

The main contribution of this work is the practical integration of smartphone-based Bluetooth messaging, LoRa, and a GPS-enabled panic alert into a prototype intended for supplementary emergency communication. The system is designed to provide a direct communication link between the transmitter and receiver without depending on cellular networks or internet connectivity for message transfer. However, the current prototype displays received information locally and does not automatically forward alerts to a centralized rescue authority.

II. RELATED WORK

Research on emergency communication has examined LoRa-based messaging, GPS-assisted alerts, off-grid wireless communication, and embedded interfaces for disaster response. The ten article entries supplied for this project cover these broad topics, including LoRa emergency communication for disaster management [1], GPS-enabled panic alerting [2], long-range communication in disaster scenarios [3], and integration of LoRa with GPS for emergency alerts [4]. These topics are directly related to the requirements of the proposed prototype.

Bluetooth-based serial interfaces have also been considered for controlling and exchanging data with Internet of Things (IoT) devices [5]. Embedded display interfaces and scrolling-text mechanisms are relevant to the receiver, where messages must be presented on a compact LCD [6], [9]. Broader reviews of disaster communication technologies describe the importance of communication methods that can operate when conventional infrastructure is disrupted [7], [10]. Device-specific performance and integration are also important, particularly for the SX1278 LoRa transceiver and ESP32 development platform [8], [11], [12]. GPS module documentation provides the technical basis for location acquisition using the NEO-6M module [13].

Building on these areas, the present work integrates smartphone-based text entry through Bluetooth, direct 433 MHz LoRa transmission using ESP32 and SX1278 modules, a panic button, GPS-based coordinates when available, and an LCD receiver. Unlike systems that may rely on multi-hop routing or centralized infrastructure, the current prototype uses a direct transmitter-to-receiver link. It does not implement acknowledgments, multi-hop forwarding, or automatic notification of rescue authorities. The specific bibliographic details of the ten supplied research-paper entries should be verified against the original publications before the paper is submitted.

III. PROPOSED SYSTEM

A. System Architecture

The proposed system consists of a transmitter unit and a receiver unit communicating through a LoRa wireless link. The transmitter contains an ESP32 development board, an SX1278 LoRa module, a Bluetooth serial interface, a GPS NEO-6M module, and a panic button. A smartphone running a serial Bluetooth terminal application is paired with the transmitter to enter normal text messages. The receiver contains an ESP32, an SX1278 LoRa module, and a 16 × 2 I2C LCD. The direct LoRa link transfers message data without requiring cellular service or internet connectivity.

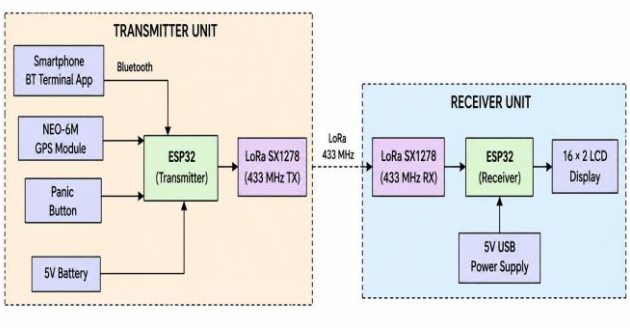

Fig. 1. Block diagram of the proposed LoRa-based emergency communication system.

B. Transmitter Unit

The transmitter ESP32 receives ordinary text messages from the smartphone through Bluetooth Serial. The message is then passed to the LoRa module for wireless transmission. The panic button is connected to GPIO 4 and configured using the internal pull-up resistor. When the button is activated, the firmware generates an emergency packet beginning with the prefix PANIC|. If valid GPS coordinates are available, latitude and longitude are included in the packet. If a valid GPS fix is unavailable, the packet uses PANIC|0.000000,0.000000.

C. Receiver Unit

The receiver ESP32 listens for incoming LoRa packets and checks whether the received data represents a normal message or a panic alert. Normal messages are displayed on the 16 × 2 I2C LCD with scrolling text when necessary. Messages beginning with PANIC| are identified as emergency alerts, and the receiver displays a panic indication along with the received coordinate string.

D. Message Transmission Procedure

For normal messaging, the user enters text in the smartphone application, the transmitter receives it over Bluetooth, and the ESP32 forwards the text through LoRa. For an emergency alert, pressing the panic button triggers generation and transmission of the panic packet. The receiver processes the incoming packet and updates the LCD. The implemented message length is limited to 250 characters. The current prototype does not return a delivery acknowledgment to the transmitter.

(This work is licensed under a Creative Commons Attribution 4.0 International License.)

International Journal of Engineering Research & Technology (IJERT)
ISSN: 2278-0181
Vol. 15 Issue 11 , November - 2026

IV. IMPLEMENTATION

A. Hardware Configuration

Both transmitter and receiver use ESP32 DevKit V1 development boards and SX1278 LoRa modules configured for operation at 433 MHz. The LoRa modules share the SPI interface with NSS/CS connected to GPIO 5, reset to GPIO 14, DIO0 to GPIO 2, SCK to GPIO 18, MOSI to GPIO 23, and MISO to GPIO 19. The transmitter additionally uses a NEO-6M GPS module, connected through the ESP32 UART interface, and a panic button connected between GPIO 4 and ground. The receiver uses a 16 × 2 LCD with an I2C interface; SDA and SCL are connected to GPIO 21 and GPIO 22, respectively. The LCD address used in the firmware is 0x27.

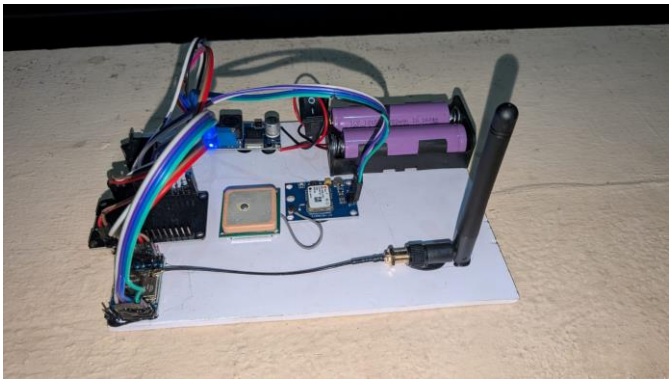

Fig. 3(a) — Transmitter unit: The photograph showing the transmitter hardware, including the ESP32, GPS module, LoRa module, panic button, antenna, and battery supply.

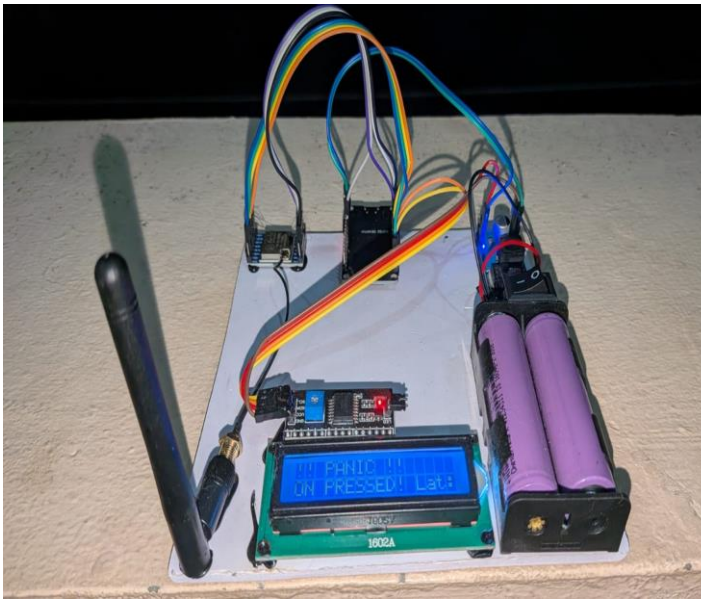

Fig. 3(b) — Receiver unit: The photograph showing the receiver hardware, including the ESP32, LoRa module, LCD display, antenna, and power supply.

B. Software Implementation

The firmware was developed for the ESP32 using the Arduino programming environment and supporting libraries. SPI.h and LoRa.h support LoRa communication; BluetoothSerial.h provides the Bluetooth serial interface; TinyGPS++.h processes GPS data; and Wire.h with LiquidCrystal_I2C.h supports the LCD. The LoRa modules are configured to use 433E6 as the operating frequency. The GPS receiver is read through a hardware UART. A debounce interval of approximately 50 ms is used for the panic button, while the receiver refreshes scrolling text at approximately 500 ms intervals.

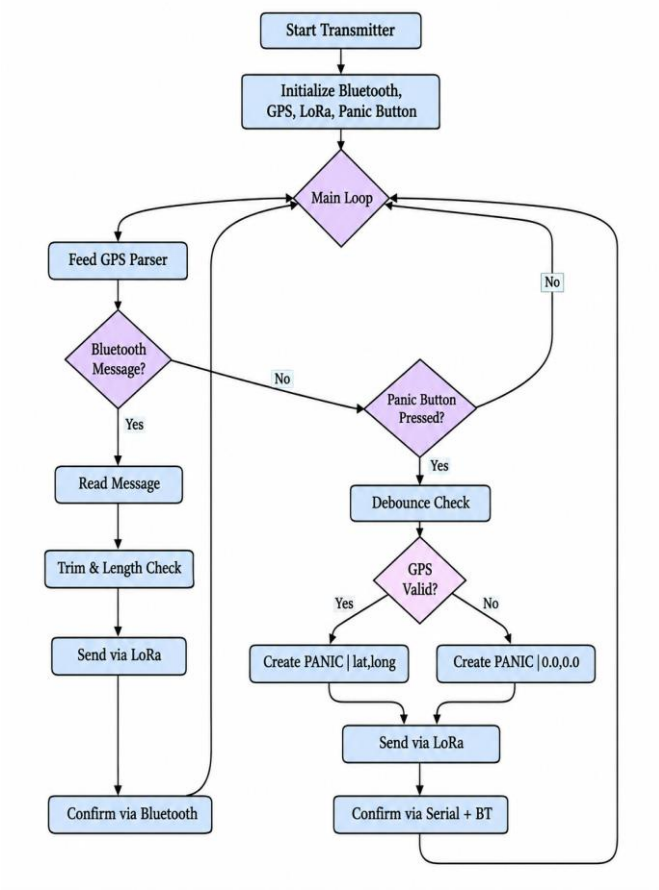

Fig. 2. Flowchart of the transmitter software and emergency alert handling procedure.

C. Message Handling

Incoming Bluetooth text is forwarded through the LoRa transmitter. On the receiver side, the received packet is checked for the PANIC| prefix. If the prefix is present, the packet is treated as a panic alert; otherwise, it is handled as an ordinary text message. The LCD interface presents the received content in a readable form, using scrolling when the message exceeds the display width. When GPS data is invalid or unavailable, the transmitter uses zero-valued coordinates as the fallback content for the panic packet.

(This work is licensed under a Creative Commons Attribution 4.0 International License.)

International Journal of Engineering Research & Technology (IJERT)
ISSN: 2278-0181
Vol. 15 Issue 11 , November - 2026

D. Integration and Testing

The transmitter and receiver firmware were integrated and tested using normal text messages and panic-button activation. GPS behavior was checked in open and closed environments. The radio link was tested in a built-up area containing obstacles. The tests focused on verifying the end-to-end message path, panic-alert recognition, LCD display behavior, GPS coordinate availability, and the maximum observed communication distance.

V. EXPERIMENTAL RESULTS AND DISCUSSION

A. Normal Message Transmission

The normal messaging functionality was tested by entering text through the Bluetooth Serial Terminal application on the smartphone. The transmitter received the message and transmitted it through the LoRa link. The receiver processed the incoming message and displayed it on the 16 × 2 LCD. The scrolling-text functionality enabled the receiver to present messages that exceeded the available LCD display width.

B. Emergency Alert Functionality

The panic-button functionality was tested to verify emergency message generation and reception. When the panic button was activated, the transmitter generated a message using the configured PANIC| prefix. The receiver identified the prefix and displayed a panic indication on the LCD. When valid GPS coordinates were available, the panic message included the corresponding latitude and longitude. When a valid GPS fix was unavailable, the system transmitted zero coordinates. The emergency-alert transmission mechanism therefore operated even when valid location information could not be obtained, although the actual location remained unknown in such cases.



Fig. 4. Receiver LCD displaying the emergency panic alert and location coordinates.

C. Communication Range

The communication range was evaluated in a built-up environment containing obstacles. The transmitter and receiver successfully communicated over a maximum observed distance of approximately 2 km under the tested conditions. This result should not be interpreted as a guaranteed range for other locations because performance depends on environmental conditions, antenna placement, and obstructions. Further tests under different conditions would be required to characterize the communication range more comprehensively.

D. GPS Performance

GPS functionality was evaluated in open and closed environments. In open spaces, the GPS module obtained valid location coordinates, which could be included in the panic alert. In closed spaces, a valid GPS fix could not be obtained during the observed tests. Consequently, the transmitter used zero coordinates in the panic message. This limitation reduces the usefulness of location-based emergency reporting when satellite signals are unavailable.

E. Discussion

The experimental observations demonstrate the feasibility of integrating Bluetooth-based message entry, LoRa wireless transmission, GPS-based location reporting, and LCD-based message display in a single emergency communication prototype. The system provides a direct communication link that does not depend on cellular networks or internet connectivity for message transfer between the transmitter and receiver. The tests were limited to the observed setup and environment; no packet-delivery percentage, latency, or GPS accuracy values were measured and are therefore not reported. The current implementation also lacks delivery acknowledgments, multi-hop forwarding, and automatic notification of emergency response authorities.

VI. CONCLUSION AND FUTURE WORK

A. Conclusion

This paper presented a Smart Emergency Communication System for Natural Disasters using LoRa technology. The prototype was developed using ESP32 development boards and SX1278 LoRa modules operating at 433 MHz. Bluetooth connectivity enabled smartphone-based text input, while a GPS module and panic button supported emergency alert generation. The receiver displayed received messages and panic alerts on a 16 × 2 LCD. Testing demonstrated successful message transmission over a maximum observed distance of up to 2 km in a built-up environment with obstacles under the tested conditions. GPS coordinates were obtained in open spaces, whereas valid fixes were unavailable in closed spaces, resulting in zero coordinates in the panic alert. The prototype demonstrates the feasibility of supplementary emergency messaging without cellular networks or internet connectivity for the direct transmitter-to-receiver link. However, it is not a complete disaster-response solution because received alerts are displayed locally and are not automatically forwarded to rescue authorities.

(This work is licensed under a Creative Commons Attribution 4.0 International License.)

International Journal of Engineering Research & Technology (IJERT)
ISSN: 2278-0181
Vol. 15 Issue 11 , November - 2026

B. Future Work

Future work may include message acknowledgment and retransmission mechanisms, multi-hop or mesh networking to extend coverage, and integration with a centralized monitoring station for forwarding alerts to rescue personnel. Alternative location-reporting approaches could be investigated for environments where GPS signals are unavailable. Additional range and reliability tests across different distances, obstruction levels, and environmental conditions would provide a more systematic evaluation of the prototype.

ACKNOWLEDGMENT

The authors express their sincere gratitude to their project guide, Smt. Divyashree G, Assistant Professor, Department of Electronics and Communication Engineering, GSSS Institute of Engineering and Technology for Women, Mysuru, Karnataka, India, for her valuable guidance, encouragement, and support throughout the development of this project. The authors also thank the department and institution for providing the facilities and support required to carry out this work.

REFERENCES

[1] R. Kumar and S. Singh, “LoRa Based Emergency Communication for Disaster Management,” International Journal of Disaster Response, vol. 11, no. 3, pp. 45–54, 2023.
[2] A. Sharma and P. Verma, “GPS-Enabled Panic Alert System Using LoRa,” IEEE Sensors Journal, vol. 24, no. 2, pp. 1234–1242, 2024.
[3] L. Chen and H. Wang, “Long Range Communication for Disaster Scenarios,” Wireless Communications Review, vol. 18, no. 4, pp. 78–86, 2022.
[4] M. Khan and S. Shaikh, “LoRa and GPS Integration for Emergency Alerting,” International Journal of Telecommunication, vol. 15, no. 2, pp. 89–97, 2023.
[5] T. Nakamura and S. Tanaka, “Bluetooth Serial Terminal Applications for IoT Control,” Mobile Computing Review, vol. 22, no. 1, pp. 56–64, 2024.
[6] R. Fernandez and L. Schmidt, “LCD Display Interfaces for Emergency Systems,” Display Technology, vol. 19, no. 3, pp. 67–74, 2022.
[7] S. Gupta and A. Sharma, “Disaster Communication Technologies: A Review,” Journal of Emergency Management, vol. 21, no. 2, pp. 67–75, 2023.
[8] K. Kumar and R. Reddy, “SX1278 LoRa Module Performance in Disaster Scenarios,” IEEE Access, vol. 12, pp. 34567–34578, 2024.
[9] P. Narkhede and R. Wagh, “Scrolling Text Displays for Embedded Systems,” Embedded Systems Review, vol. 17, no. 2, pp. 45–53, 2023.
[10] M. Johnson and S. Williams, “Emergency Communication for Natural Disasters: Challenges and Solutions,” Disaster Prevention and Management, vol. 33, no. 1, pp. 56–64, 2024.
[11] Espressif Systems, ESP32 Technical Reference Manual, 2024.
[12] Semtech Corporation, SX1278 LoRa Transceiver Datasheet, 2023.
[13] u-blox, NEO-6M GPS Module Datasheet, 2024.

(This work is licensed under a Creative Commons Attribution 4.0 International License.)