Improvement In Congestion Management With Reduction In Operating Cost In Power System Using STATCOM Controller.

Sneha Tibude
4th sem MTech (Student)
Electrical Engg. Department.
G.H.Raisoni college of Engineering.
Nagpur, India.

Vedashree Rajderkar
Lecturer
Electrical Engg. Department.
G.H.Raisoni college of Engineering.
Nagpur, India.

Abstract

Growth in load demand may lead to changes in generation sources and sizes along with all the uncertainty of transactions will further strain existing power systems, and may lead to the transmission systems to work closer to their operating limits or even beyond its transfer capacity and cause congestion. Applications of newly emerging technologies are able to provide solutions for electricity markets to maintain the stability and reliability of power systems while handling large volumes of transactions. FACTS allows flexible operation of AC transmission systems whereby the changes can be accommodated very easily without stressing the system. In this paper the proposed methods are illustrated with a IEEE 30-bus system to improve the congestion management and to reduce the operating cost of the system using STATCOM controller. The optimal location as well as optimal rating of the device is found out for optimal system using Power World Simulator Software 12.0.

1. Introduction

Congestion management is one of the most important issue for secure and reliable system operations in deregulated electricity market. Various cases like uniform line loading, line outage, bilateral & multilateral transaction between source & sink nodes have been considered to create congestion in the system. For secure operation of power system, the network loading has to be maintained within specified limits. Transmission line congestion initiates the cascading outages which forces the system to collapse. Installation of the FACTS controllers is recognized as one of the cost effective solution, but their installation cost is very high, hence they have to be installed optimally to satisfy a desired objective. Congestion management is done to improve branch loading, improve voltage stability and reduce line losses in the deregulated power system. The power flow in AC transmission line is controlled to enhance power transfer capacity and to change power flow under dynamic conditions to ensure system stability and security. The increase in the loading of the transmission lines results into the voltage collapse due to the shortage of reactive power which is delivered at the load centers. This is because of the increased consumption of the reactive power in the transmission network. FACTS (Flexible AC Transmission Systems) can provide various benefits to transmission owners, such as control of power flow as demanded, increasing the system security through raising the transient stability limit, limiting leakage and short circuit currents, overloads, increase the loading capability of lines to their thermal limits, managing cascading blackouts and avoiding them, damping electromechanical oscillations of power systems and machines, providing secure tie line connection to neighboring utilities and regions thereby decreasing overall generation reserve needs on both the sides, providing greater flexibility in sitting new generation, upgrade of lines, reduce reactive power flows, thus allowing the lines for reduced losses and to carry more active power, reducing loop flows, increasing utilization of lowest cost generation. FACTS controllers can offer great opportunities in modern power system allowing better and safer operation of the grid. Their technical benefits are very well acknowledged. The STATCOM (Static Synchronous Compensator) is a shunt device which is used for voltage regulation and reactive power compensation.

IJERT

The STATCOM controller is used in the proposed study for improvement in the congestion management and reduction in operating cost in power system using IEEE 30-bus system. FACTS devices are very costly, therefore for optimal running of the system, the optimal location of the device must be found out. The sensitivity analysis is done for finding out the optimal location of the device. The Optimal cost of the system is found out by OPF using Power World Simulator Software 12.0. The optimal rating and optimal location of the FACTS controller results in the reduced congestion in the system while reducing the operating cost of the system. Thus resulting in the more stable and reliable power system.

2. STATCOM (FACTS) controller

FACTS controllers are mainly used for the voltage regulation and reactive power compensation. Reactive power is produced and absorbed by all the major components of a power system like generators, power transfer components, loads, reactive power compensation devices.

The STATCOM is a solid-state shunt device that generates or absorbs reactive power. It is a member of family of devices known as flexible AC transmission system (FACTS) devices. The STATCOM controller is used for the purpose of congestion management and reduction in the operating cost in further studies. The basic model of STATCOM is as below in Fig 1-

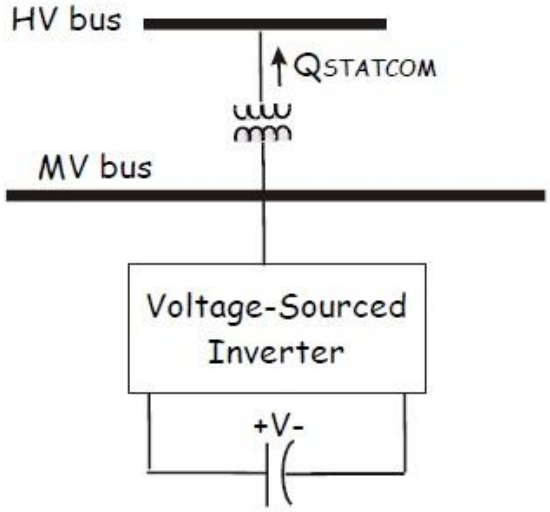

Fig 1: Basic model of STATCOM.

The equivalent circuit diagram of STATCOM model is as given below in Fig 2-

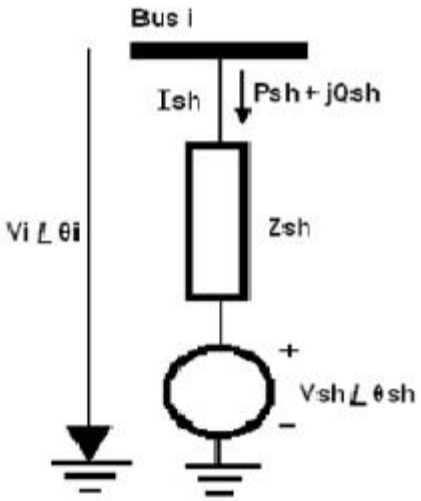

Fig 2: equivalent circuit diagram of STATCOM model.

In Fig 2, *Vsh* is the voltage magnitude from the shunt branch, , *Ish* is the current injection of the shunt branch, *Zsh* is the impedance from the shunt branch, *Vi* is the voltage at bus *i*, *Ish* is the line current flow from the shunt branch, *Psh* is the real power line flow from the shunt branch, *Qsh* is the reactive power flow from the shunt branch.

The V-I characteristics of the STATCOM is shown in Fig 3 with various changes in power flow.

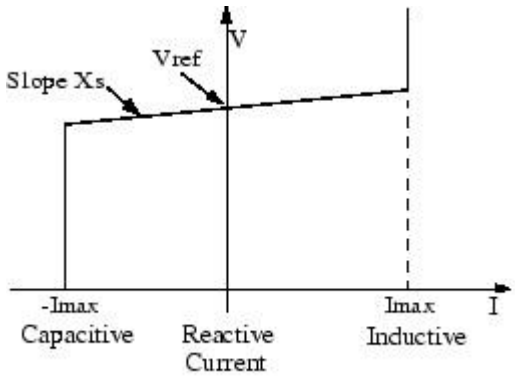

Fig 3: V-I characteristics of the STATCOM.

Benefits of the STATCOM

- Improves power quality and plant reliability

IJERT

- Increases network stability and transmission capacity
- Delivers grid compliance when necessary for renewable energy
- High availability and reliability

3. Methodology for optimal location of STATCOM controller

The installation of FACTS devices is a very effective solution on the problem of congestion management. But their installation cost is very high; hence they should be installed optimally. In this work, the optimal location of the STATCOM is found out using sensitivity approach. After finding out the optimal location of the device using reactive transmission congestion distribution factor (QTCDF) by sensitivity approach, the optimal rating of the device is found out to make the system more economical.

Sensitivity approach

A sensitivity approach is the conventional approach which could be applied for finding out the optimal location of STATCOM device. In the event of congestion, it is important to relieve overloads and to support voltages for secure operation of the system.

Sensitivity based three-step methodology for identifying optimal location and rating of facts controllers

For secure operation of the system, it is very essential to manage the congestions in the system. The sequence of the three stages by which the optimal location and the optimal rating of the device is found out is shown in Fig 4. In second stage the optimal location of the device is found out by sensitivity approach and in third stage the optimal rating of the device is found out.

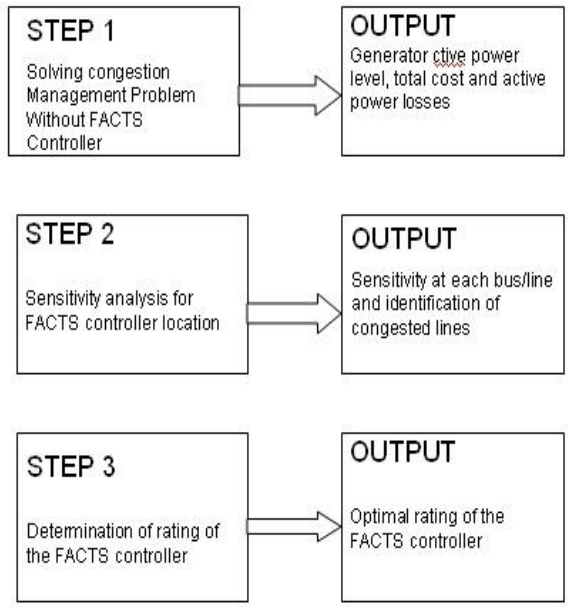

Fig 4: Overview of Sensitivity Based Three-Step Solution Method.

IJERT

Reactive Transmission Congestion Distribution Factors (QTCDF)

Reactive transmission congestion distribution factors (QTCDF) denotes how much reactive power flow over a transmission line would change due to change in reactive power infection.

Reactive transmission congestion distribution factors (QTCDFs) are defined as the change in the reactive power flow (ΔQ) in a transmission line -*k* connected between bus -*i* and bus-*j* due to unit change in the reactive power injection (ΔQ_n) at bus -*n* and can be written as-

$$QTCDF_n^k = \frac{\Delta Q_{ij}}{\Delta Q_n}$$

$$a'_{ij} = V_i V_j Y_{ij} Cos(\theta_{ij} + \delta_j - \delta_i)$$

$$b'_{ij} = -V_i V_j Y_{ij} Cos(\theta_{ij} + \delta_j - \delta_i)$$

$$\begin{bmatrix} \Delta P \\ \Delta Q \end{bmatrix} = [J] \begin{bmatrix} \Delta \delta \\ \Delta V \end{bmatrix} = \begin{bmatrix} J_{11} & J_{12} \\ J_{21} & J_{22} \end{bmatrix} \begin{bmatrix} \Delta \delta \\ \Delta V \end{bmatrix}$$

$$[\Delta V] = [J_{22}]^{-1} [\Delta Q]$$

$$[n] = [J_{22}]^{-1}$$

$$QTCDF_n^k = a_{ij}^{'} n_{in} + b_{ij}^{'} n_{jn}$$

From the QTCDF calculations, the sensitivity of various buses is found out and from these results the optimal location of the device is confirmed.

4. Simulation and results

In this case study, the work is done on IEEE 30-bus system, which is having 6 generators, 4 tap changing transformers, 37 transmission lines, 20 loads and 2 shunts. Fig 5 shows the normal operation of the IEEE 30-bus system. Fig 6 shows the IEEE 30-bus system with its generation cost, calculated by the formula-

$$\text{Min } f = (ai + bi\ Pgi + ci\ Pgi^2 + di\ Pgi^3)$$

Table 1 gives the respected cost of all generators with its generation by power world simulator software. To study the system under congested conditions, the congestions are created in the system by increasing the load. Fig 7 shows the congested IEEE 30-bus system along with its generation costs in Table 2.

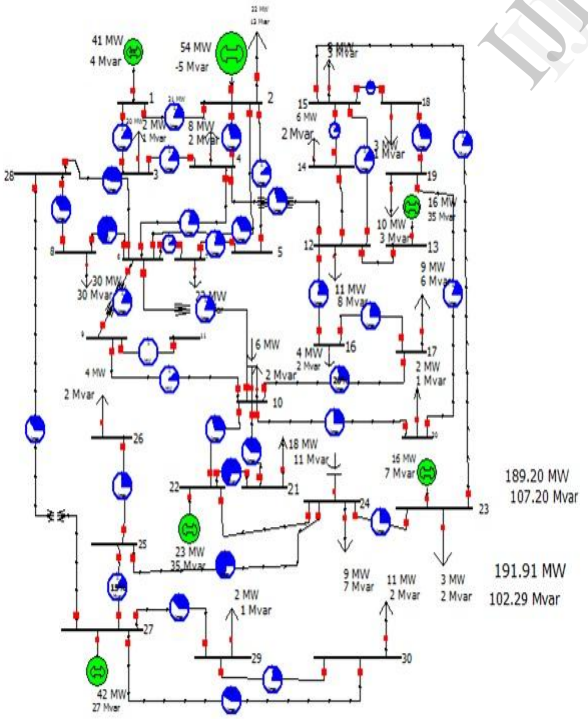

Fig 5: IEEE 30-bus system under normal condition.

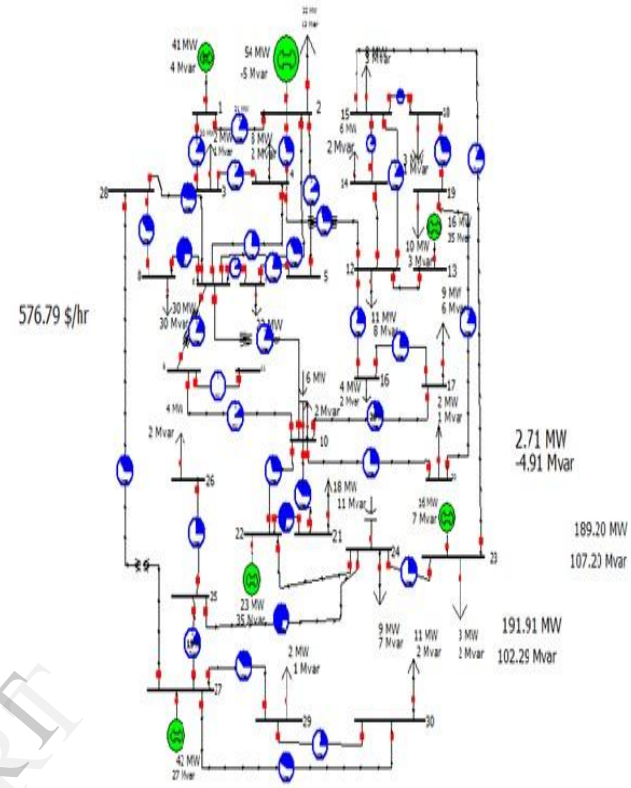

Fig 6: IEEE 30- bus system with generation cost.

Table 1: OPF generator record data for normal IEEE 30-bus system.

OPF Generator Records Data

	Number of Bus	Area Name of Gen	ID	Name of Bus	Gen MW	Cost $/Hr (generation only)
1	1	1	1	1	41.2	116.3
2	2	1	1	2	54.0	145.5
3	13	1	1	13	15.7	53.3
4	22	1	1	22	23.0	56.1
5	23	1	1	23	16.0	54.4
6	27	1	1	27	42.0	151.1

IJERT

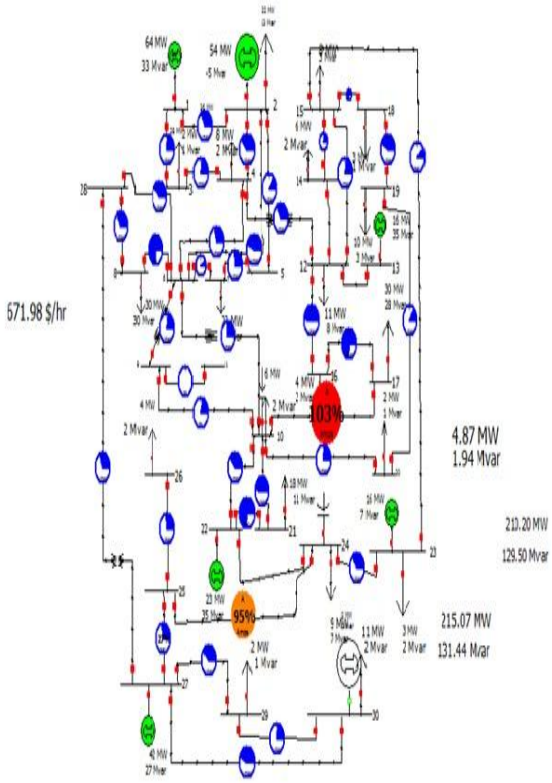

Fig 7: IEEE 30-bus system under congested condition.

Table 2: OPF generator record data for congested IEEE 30-bus system.

OPF Generator Records Data

	Number of Bus	Name of Bus	ID	Area Name of Gen	Gen MW	Cost $/Hr (generation only)
1	1	1	1	1	64.3	211.5
2	2	2	1	1	54.0	145.5
3	13	13	1	1	15.7	53.3
4	22	22	1	1	23.0	56.1
5	23	23	1	1	16.0	54.4
6	27	27	1	1	42.0	151.1

To remove this congestion, the STATCOM has to be installed at the most optimal location. The optimal location of the device is found out by using sensitivity based approach. The table below gives the sensitivity of various buses by the software results.

Table 3: Sensitivity calculation of congested IEEE 30-bus system with software.

	Number	Name	Area Num	Area Name	Loss Mvar Sei ▲
1	17	17	1	1	-0.0595
2	19	19	1	1	-0.0439
3	20	20	1	1	-0.0439
4	10	10	1	1	-0.0421
5	16	16	1	1	-0.0417
6	18	18	1	1	-0.0382
7	11	11	1	1	-0.0365
8	9	9	1	1	-0.0365
9	21	21	1	1	-0.0333
10	26	26	1	1	-0.0323
11	8	8	1	1	-0.0313
12	7	7	1	1	-0.0291
13	24	24	1	1	-0.0281
14	22	22	1	1	-0.0277
15	6	6	1	1	-0.0254
16	15	15	1	1	-0.0253
17	5	5	1	1	-0.0223
18	28	28	1	1	-0.0205
19	4	4	1	1	-0.0199
20	23	23	1	1	-0.0198
21	25	25	1	1	-0.0193
22	30	30	1	1	-0.0189
23	14	14	1	1	-0.0184
24	12	12	1	1	-0.0184
25	13	13	1	1	-0.0183
26	3	3	1	1	-0.0168
27	29	29	1	1	-0.0158
28	2	2	1	1	-0.0151
29	27	27	1	1	-0.0081
30	1	1	1	1	0.0000

IJERT

The sensitivity calculations are again done manually by the method of Reactive Transmission Congestion Distribution Factor (QTCDF) given in Table 4 along with its respective cost regarding various buses. From the results it is clear that the sensitivity of bus 17 is maximum as well as the respective cost of the system is also minimum at this bus. Therefore bus 17 is the most suitable location for the installation of STATCOM.

Table 4: Sensitivity calculation by Reactive Transmission Congestion Distribution Factor (QTCDF) and respective cost.

BUS	QTCDF OF RESPECTIVE BUS	RESPECTIVE COST
BUS- 3	$QTCDF_3$= 0.004857	671.60 $/hr
BUS- 4	$QTCDF_4$ = 0.006245	671.06 $/hr
BUS- 7	$QTCDF_7$ = 0.02289	671.52 $/hr
BUS- 8	$QTCDF_8$ = 0.02706	670.38 $/hr

BUS- 10	$QTCDF_{10}$ = 0.02636	668.35 $/hr
BUS- 12	$QTCDF_{12}$ = 0.22483	672.64 $/hr
BUS- 14	$QTCDF_{14}$ = 0.22829	672.72 $/hr
BUS- 15	$QTCDF_{15}$ = 0.3830	674.24 $/hr
BUS- 16	$QTCDF_{16}$ = 0.1453	672.41 $/hr
BUS- 17	$QTCDF_{17}$ = 0.9079	667.82 $/hr
BUS- 18	$QTCDF_{18}$ = 0.06498	676.13 $/hr
BUS- 19	$QTCDF_{19}$ = 0.6335	674.87 $/hr
BUS- 20	$QTCDF_{20}$ = 0.48053	673.94 $/hr
BUS- 21	$QTCDF_{21}$ = 0.05030	671.44 $/hr
BUS- 23	$QTCDF_{23}$ = 0.23836	671.44 $/hr
BUS- 24	$QTCDF_{24}$ = 0.06175	672.42 $/hr
BUS- 26	$QTCDF_{26}$ = 0.02671	694.42 $/hr
BUS- 29	$QTCDF_{29}$ = 0.00659	686.49 $/hr
BUS- 30	$QTCDF_{30}$ = 0.00659	688.29 $/hr

The bus 17 is having the maximum value of sensitivity ,that means it is the most optimal location for the device. But for the most economical results, the optimal rating is also very important. The reduction in cost is taken into consideration for various ratings of STATCOM . The results are indicated in the table below. From the results it is clear that the most reduced cost is obtained at the rating of 37MVAR. That means the optimal location of the STATCOM is at bus 17 with the optimal rating of 37MVAR.

Table 5: Various ratings in MVAR and its respective reduction in cost for finding out optimal rating of device.

RATING IN MVAR	REDUCTION IN COST ($/Hr)
10	2.63 $/Hr
15	3.04 $/Hr
25	4.09 $/Hr
35	4.51 $/Hr
37	4.53 $/Hr
45	4.39 $/Hr
50	4.16 $/Hr
55	3.81 $/Hr
60	3.37 $/Hr
65	2.83 $/Hr

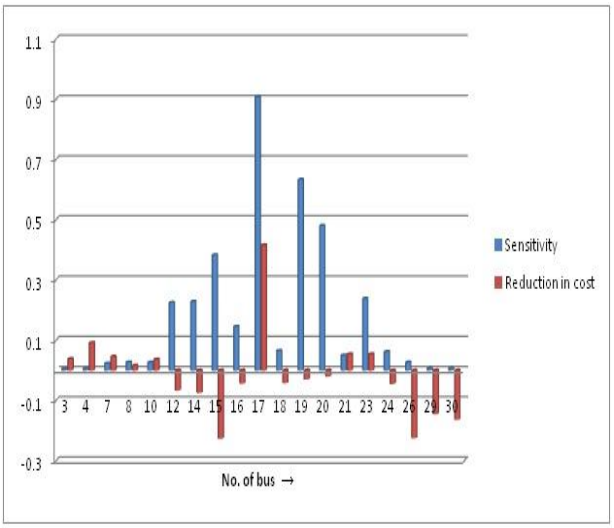

Fig 8: graph showing the relative reduction in cost and sensitivity w.r.to no. of bus.

Fig 9 shows the system with the optimal location i.e bus 17 with the optimal rating of 37MVAR.

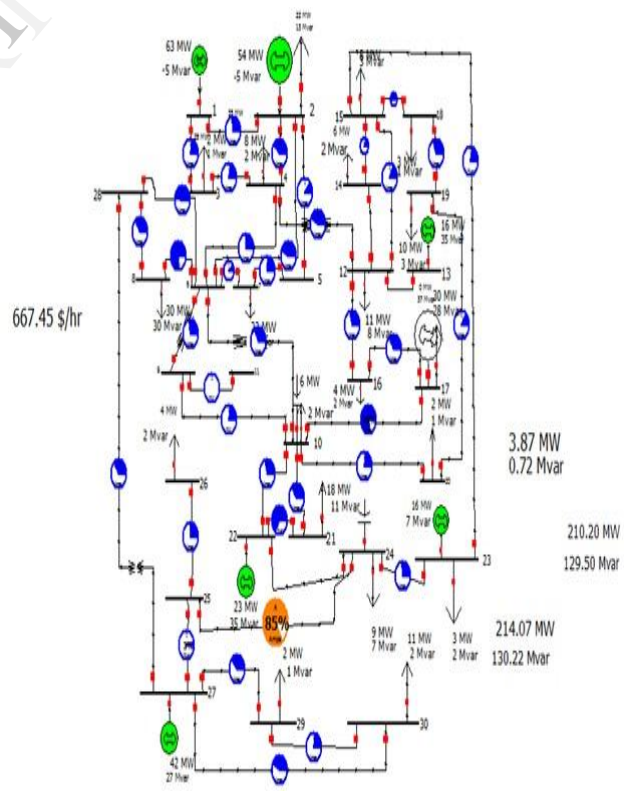

Fig 9: System with optimal location and optimal rating of the device (system is under stable limits).

IJERT

5. Conclusion and future work

The IEEE 30-bus system is studied in normal condition as well as in congested conditions to improve the congestion management. When the system is congested (Fig 7), the line between buses 24 and 25 is congested to the 103% which is not safe. And the line between buses 10 to 17 is overloaded by the amount 95%. To remove this congestion, the STATCOM is installed at its optimal location i.e bus 17 using the sensitivity approach (Table 3 and Table 4). To make the system more economical and in stable operating regions, the optimal rating is found out as 37 MVAR. Thus the optimal location of the STATCOM is bus 17 with the optimal rating of 37MVAR. It is clearly seen from Fig 9 , that after installation of STATCOM at the optimal location with the optimal rating, the congestions in the lines between buses 10 and 17 is removed and that between the buses 24 and 25 is reached to the safer and stable limit of 85%. Thus by optimally locating the STATCOM device, the congestion management is improved with the reduction in operating cost of the system. In future work, will try to implement the results for more complex and real case scenario.

6. References

[1] X. P. Zhang, B. Chong, K.R. Gogfrey, M. Bazargan, L. Schmitt. "Management of congestion costs utilizing FACTS controllers in a bilateral electricity Market environment." IEEE Conference Power Tech, 2007, PP- 1244 – 1249 , 1-5 July 2007.

[2] Reddy, K.R.S.; Padhy, N.P.; Patel, R.N. "Congestion Management in Deregulated Power System using FACTS Devices", IEEE Power India Conference, 2006, PP-1-8.

[3] Singh, S.N.; David, A.K. "Congestion Management by Optimising FACTS Device Location." International Conference on Electric Utility Deregulation and Restructuring and Power Technologies, 2000 Proceedings DRPT 2000 , Page(s): 23 – 28.

[4] Ren, H. ,Watts. D., Mi, Z., Lu, J.,Zengqiang Mi ,Jinling Lu. "A Review of FACTS' Practical Consideration And Economic Evaluation." Power and Energy Conference: 27-31 March 2009, **Page(s):** 1 – 5.

[5] Mwanza, Kennedy, Shi, You, Le Anh Tuan, "Economic Evaluation of FACTS for Congestion Management in Pool Markets." Power Tech, 2007 , IEEE Lausanne, 2007 Page(s): 2053 – 2058.

[6] Chong, B., Zhang, X.P., Godfrey, K.R., Yao, L.; Bazargan, M., "Congestion Management of Electricity Markets Using FACTS Controllers."Power Engineering Society General Meeting, 2007. IEEE , 2007 Page(s): 1 - 6 .

[7] You Shi, Mwanza, K., Le Le Tuan, "Valuation of FACTS for Managing Congestion in Bilateral Contract Markets." Power Engineering Society General Meeting, 2007. IEEE , 2007 ,Page(s):1 – 7.

[8] Kaur H, Brar Y.S. , Randhawa J.S, "Optimal power flow using power world simulator." Electric Power and Energy Conference (EPEC), 2010 IEEE, 25-27,Aug. 2010, Page(s): 1 - 6 .

[9] Dogan M. , Dosoglu M.K. , Maden D. , Tosun, S. Ozturk, A "Investigation of the best placement for voltage stability by STATCOM ." Electrical and Electronics Engineering (ELECO), 2011 ,7th International Conference , 1-4 Dec. 2011, Page(s): I-117 - I-121 .

[10] Rajderkar, V.P. , Chandrakar, V.K. "Comparison of Series FACTS Devices Via Optimal Location in a Power System for Congestion Management .", Power and Energy Engineering Conference, 2009. APPEEC 2009. Asia-Pacific , 27-31 ,March 2009 , Page(s): 1 – 5.

[11] Mandala M. , Gupta C.P. , "Congestion management by optimal placement of FACTS device.", Power Electronics, Drives and Energy Systems (PEDES) &2010 Power India, 2010 Joint International Conference , 20- 23 Dec. 2010, Page(s): 1 - 7 .

[12] Reza sirjani , azah mohamed , hussain shareef, "Optimal Placement and Sizing of Shunt FACTS Devices in Power Systems Using Heuristic Optimization Techniques: a Comprehensive Survey.", Department Of Electrical,Electronic and Systems Engineering,Universiti Kebangsaan Malaysia (UKM), Page(s): 335-341.

[13] Christie, R.D., Wollenberg, B.F., Wangensteen, I. "Transmission Management in the Deregulated Environment." Proceedings of the IEEE ,2000.Volume: 88, Issue: 2 , Page(s): 170 – 195.

[14] Fang, W.L.; Ngan, H.W. "Optimising location of unified power flow controllers using the method of augmented Lagrange multipliers." Generation, Transmission and Distribution, IEEE proceedings,Volume: 146 , Issue: 5, 1999, Page(s): 428 – 434.

IJERT

[15] Hashemzadeh, H.; Hosseini, S.H. "Locating Series FACTS Devices Using Line Outage Sensitivity Factors and Particle Swarm Optimization for Congestion Management." Power & Energy SocietyGeneral Meeting, 2009. PES '09. IEEE, 2009, Page(s): 1 - 6.

[16] Mandala, M., Gupta, C.P. "Congestion Management by Optimal Placement of FACTS Device. Power Electronics, Drives and Energy Systems (PEDES) & 2010 Power India, 2010 Joint International Conference, 2010 , Page(s): 1 – 7.

[17] Feng Qian , Guangfu Tang , Zhiyuan He , "Optimal location and capability of FACTS devices in a power system by means of sensitivity analysis and EEAC ."Electric Utility Deregulation and Restructuring and Power Technologies, 2008.DRPT 2008. Third International Conference , 6-9 April 2008 , Page(s): 2100 – 2104 .

[18] Narain G. Hingorani, Laszlo Gyugyi, "Understanding FACTS : concepts and technology of flexible AC transmission systems," IEEE press ,2000.

[19] M. A. Pai , "Computer techniques in power system analysis.",Tata Mcgraw Hill Education Private Limited,2006.

[20] Hadi Saadat, "Power System Analysis.", Tata Mcgraw Hill Edition ,2002.

IJERT